MTA SERIES

DIMENSION

MTA-N

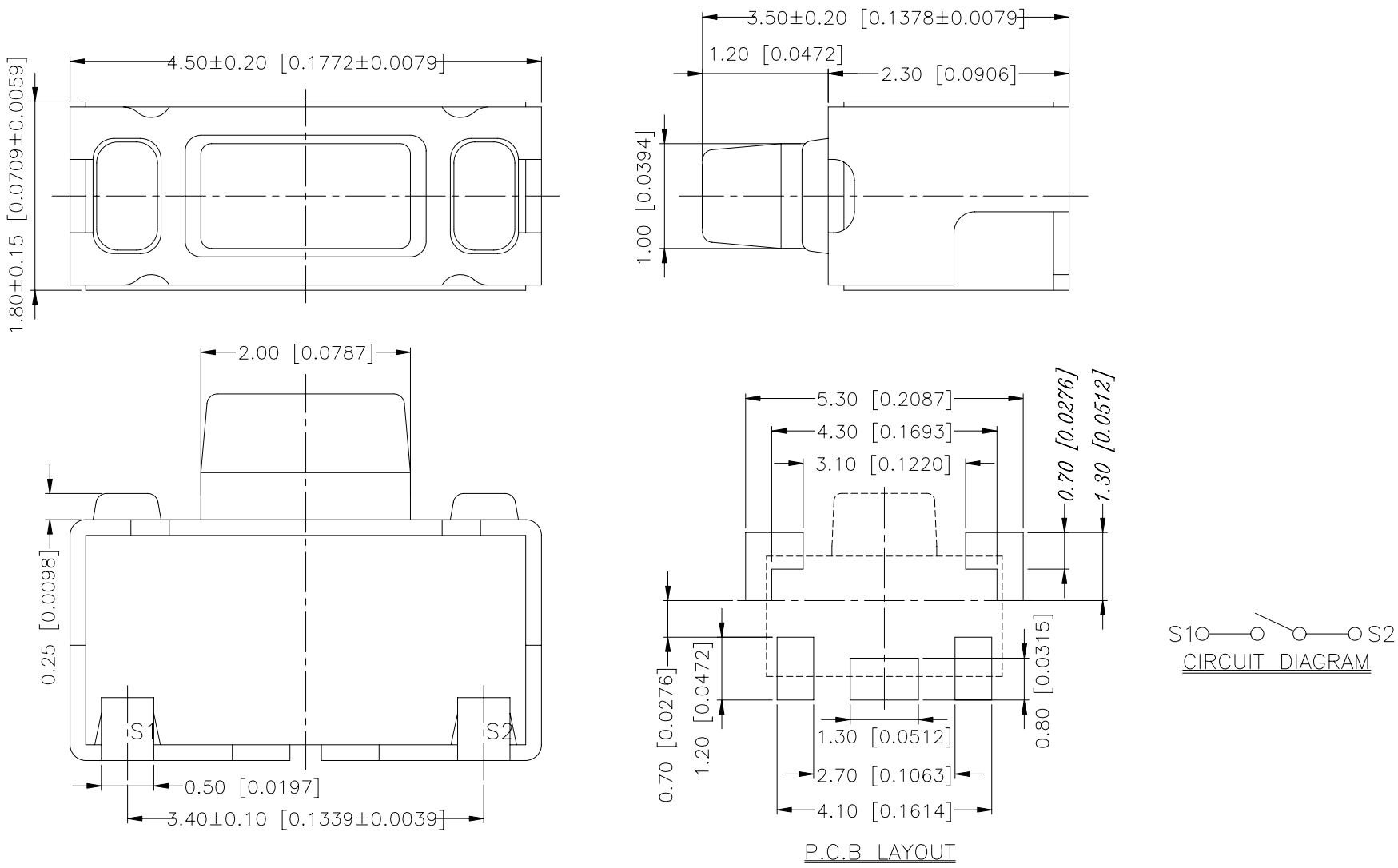

General Tolerance：±0.2mm

MTA-NC

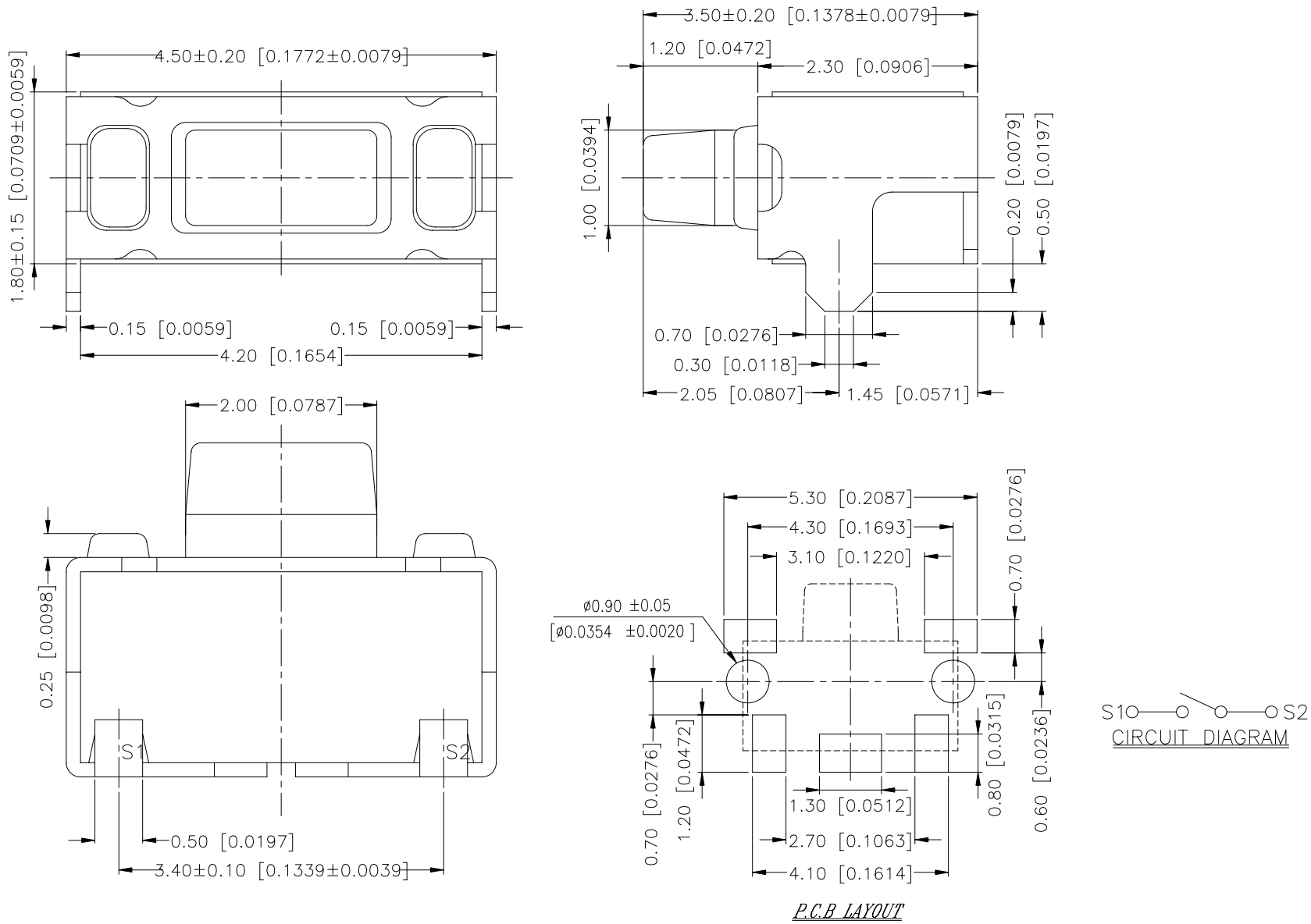

General Tolerance：±0.2mm

MTA-WN

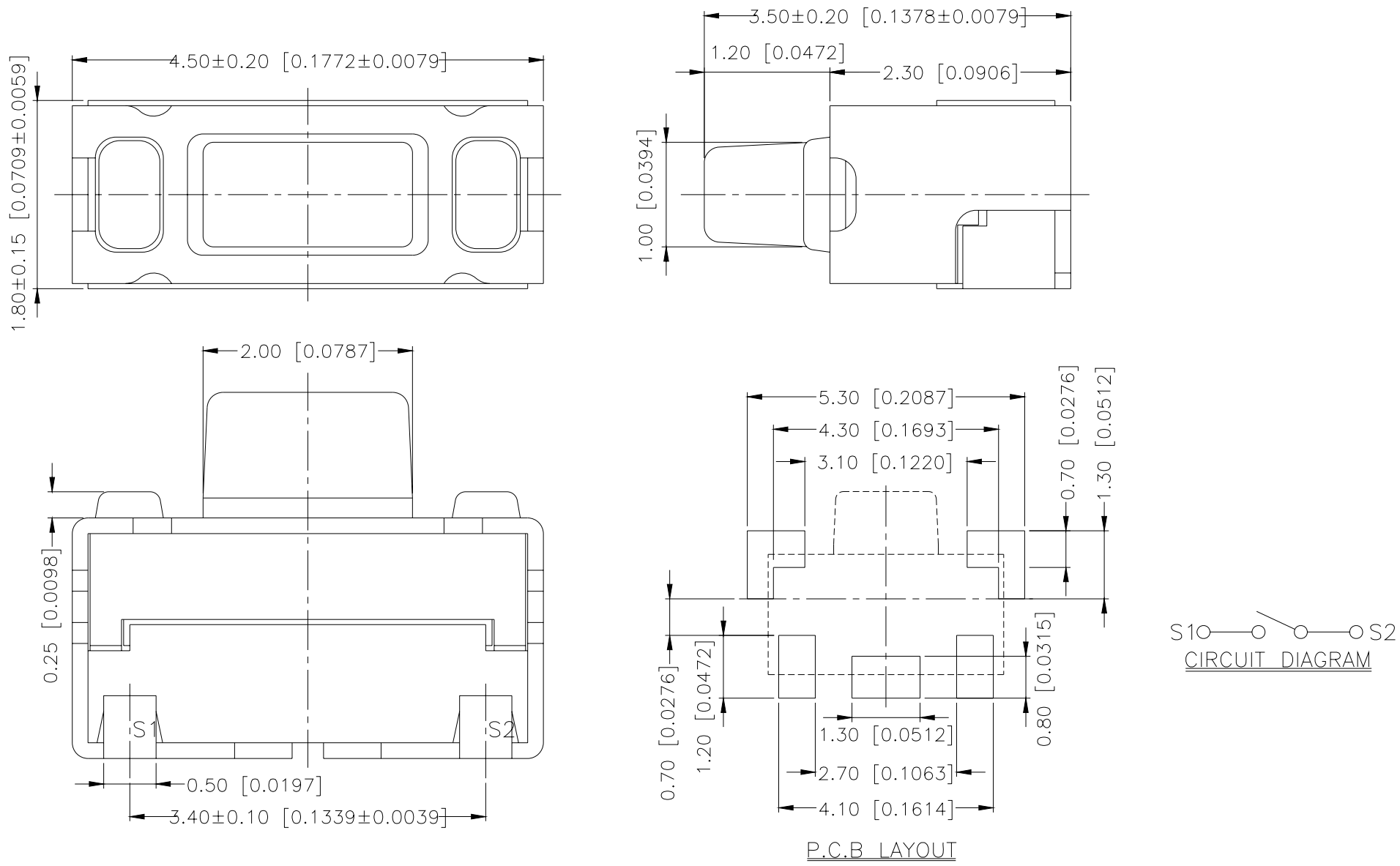

General Tolerance：±0.2mm

MTA-WNC

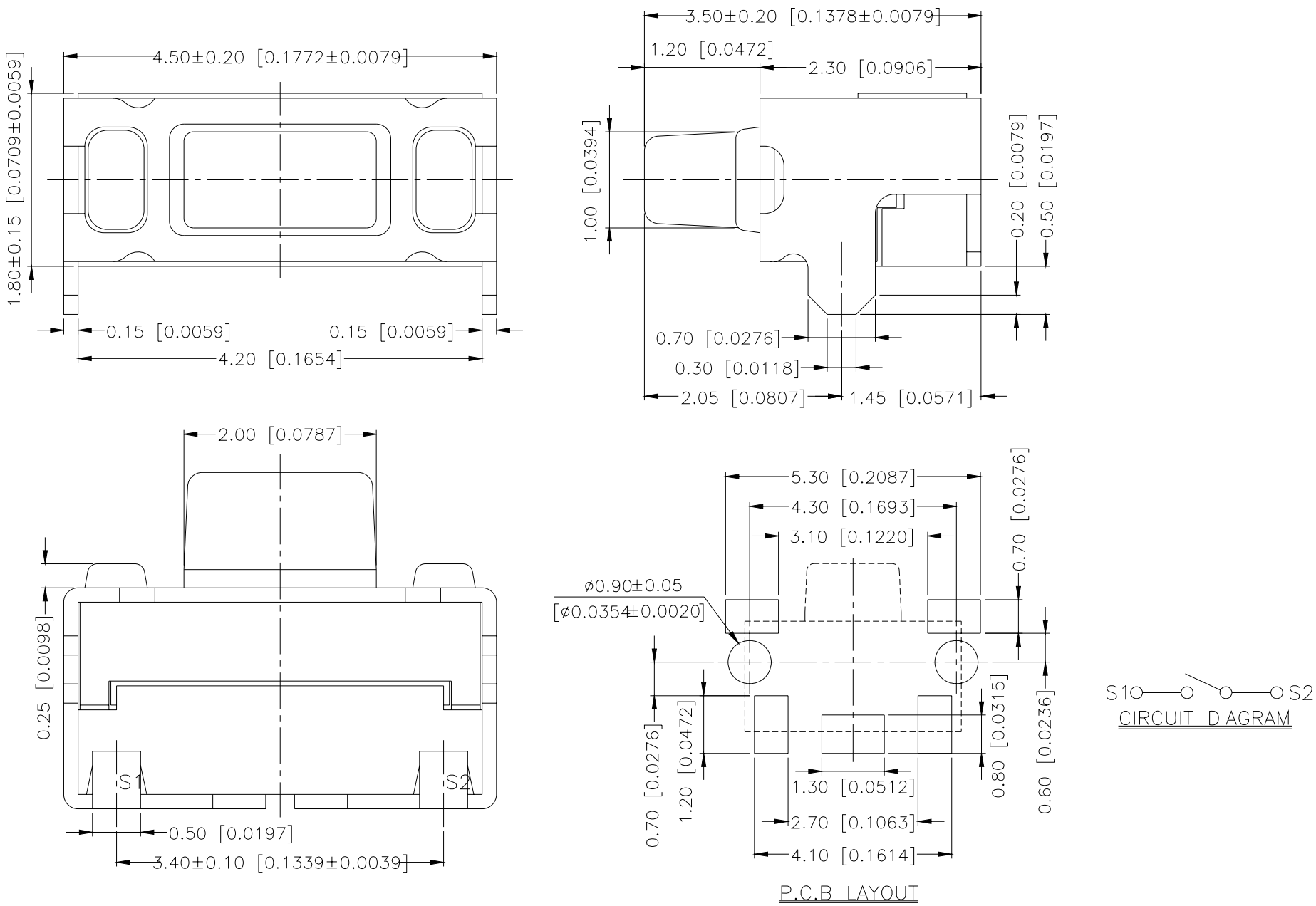

General Tolerance：±0.2mm

HOW TO ORDER

M T A - □ □ □ - V - □

- **Package Style：**
  T/R = Tape & Reel
- **Soldering：**
  V = Lead Free Solderable
- **C = With Post**
- **Color Of Stem For Operating Force：**
  N = Brown, 160gf
- **W = Washable Type**
  □ = Non-Washable Type
- **Right Angle Type**

SPECIFICATION

△MECHANICAL

Mechanical Life：50,000 cycles
Operation Force：160±50gf
Stroke：0.2±0.1mm

△ENVIRONMENTAL

Operation Temperature Range：-30℃ to +80℃
Storage Temperature Range：-40℃ to +90℃

△ELECTRICAL

Electrical Life: 50,000 cycles
Switching Rating: 50 mA, 12 VDC

MATERIALS

△COVER：Nickel Silver
△BLOCK：PA9T High-temp Thermoplastic
Color：Black
△STEM：PA9T High-temp Thermoplastic
Color：Brown
△ADHESIVE TYPE：Kapton
△CONTACT：Stainless steel
△BASE：PA9T High-temp Thermoplastic
Color：Black
△TERMINAL：Brass with silver plating

SOLDERING PROCESS

△HAND SOLDERING：Us a soldering iron of 30 watts, controlled at 350℃ approximately 5 seconds while applying solder.

△REFLOW SOLDERING：When applying reflow soldering, the peak temperature or the reflow over should be set to 260℃ max.

△TEMPERATURE PROFILE：

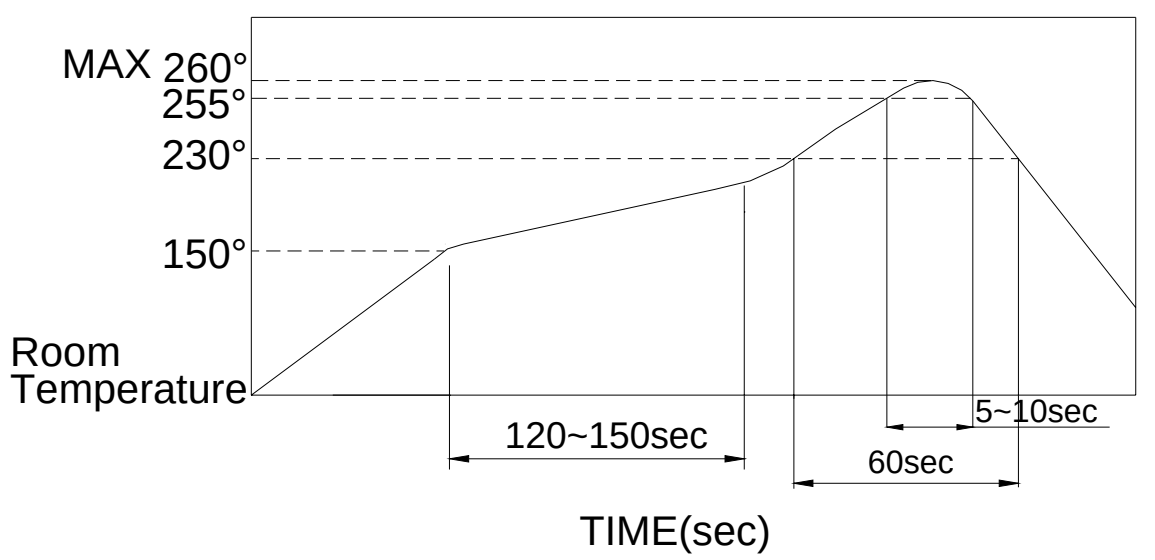

PACKING

Part Number	Number Per Reel	Number Per Tube
MTA-N	3000	—
MTA-NC	3000	—
MTA-WN	3000	—
MTA-WNC	3000	—

REEL

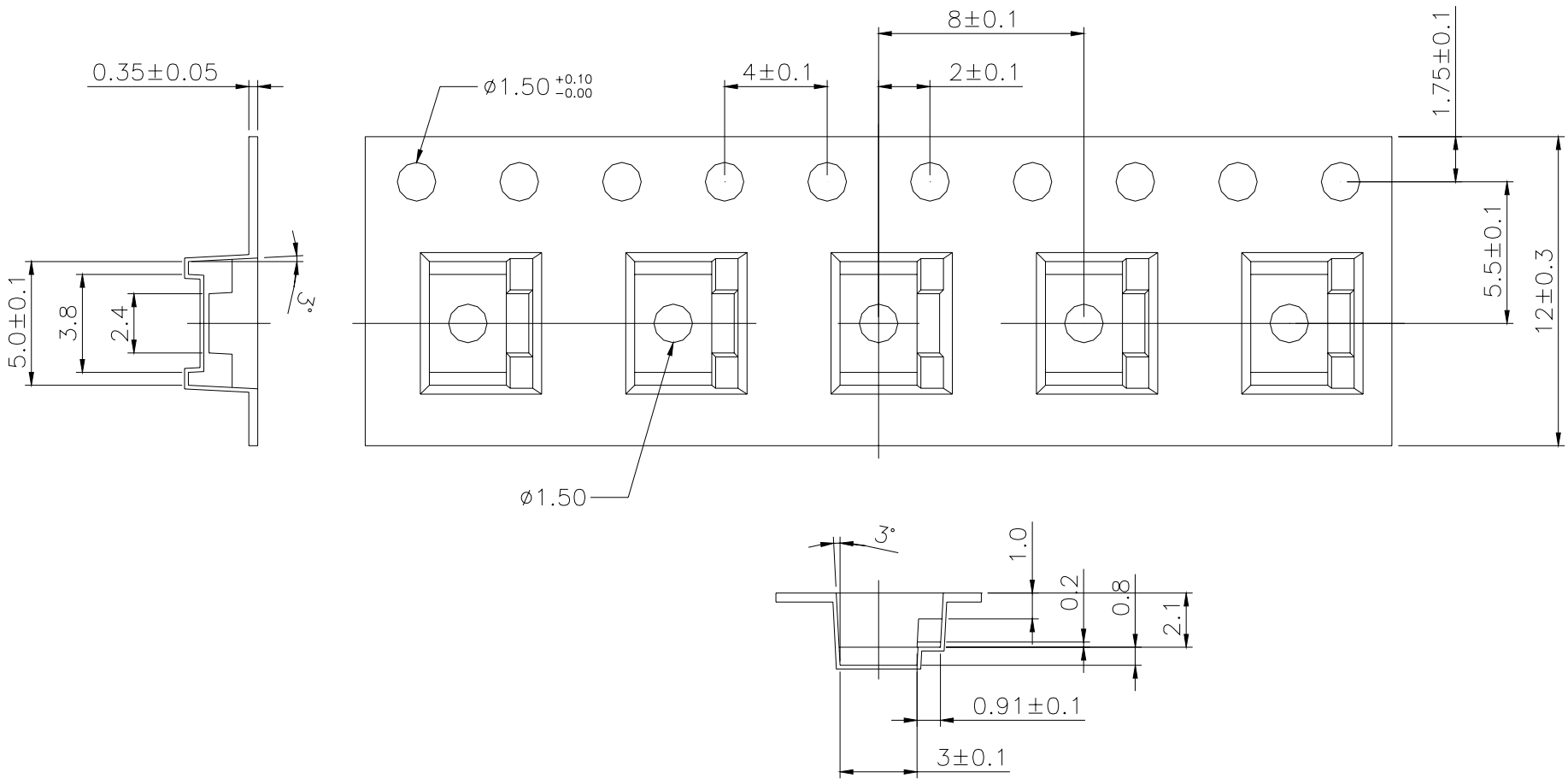

General Tolerance：±0.2mm